TECHNICAL DATA

SURFACE-MOUNTED SCREEN

SC900
SC910

art.no. 60340

SHUTTERS
VOLETS

SUN PROTECTION
PROTECTION SOLAIRE

HAROL®

ALWAYS READ THE INSTALLATION INSTRUCTIONS BEFORE ASSEMBLING!!!

TABLE OF CONTENTS

1. GENERAL 4

2. DIMENSIONS 4

3. BOX FOR SURFACE-MOUNTED SCREEN 5

3.1. Box for surface-mounted screen SC900 5
3.2. Box for surface-mounted screen SC910 6

4. THE FABRIC ROLL 7

5. CONSOLES 7

6. OPERATION 8

7. BOTTOM LATH 9

8. GUIDE RAILS 9

9. POSSIBLE COMBINATIONS FOR MULTIPLE SURFACE-MOUNTED SCREENS 10

10. FABRICS 10

11. OBSCURATION 13

12. WEIGHT 13

13.FINISH 14

14. GENERAL REMARKS 14

15. ROLL-UP TABLES 15

16. CROSS-SECTION DIMENSIONING OF THE BOX 18

16.1. SC900 18
16.2. SC910 19

17. WINDOW ANCHORS 19

18. ORDER FORM SC900 / SC910 19

19. FINISH OPTIONS 20

1. GENERAL

The SC900 surface-mounted screen is a vertical outdoor sun protection with integrated insulation, which is built on top of a window frame.
It consists of:
– An insulated box with an easily removable motor-controlled fabric roll.
– A special polyester or fibreglass cloth with zipper that is rolled up in the box.
– Detachable guide rails with removable holder for the zipper guide.
– A weighted bottom lath to retain the tension in the fabric and to guide the screen fabric correctly.

The SC910 surface-mounted screen is a vertical outdoor sun protection, which is built on top of a window frame.
It consists of:
– An open box with an easily removable motor-controlled fabric roll.
– A special polyester or fibreglass fabric with zipper that is rolled up in the box.
– Detachable guide rails with removable holder for the zipper guide.
– A weighted bottom lath to retain the tension in the fabric and to guide the screen fabric correctly.
In order to obtain the necessary insulation value, the screen box must be finished by the installer along the inside.

Fig. 1

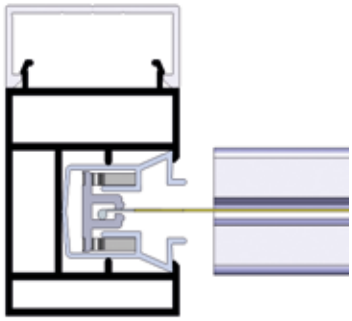

Figure 1:
Zip principle

The SC900 and SC910 features a zipper system that ensures that in each height position of the bottom lath, the fabric remains taut and cannot come out of the guide rails. On the left and right, the pieces of fabric are always finished with a zipper, of which the thicker side slides into a plastic zipper profile. This is placed into a plastic zipper profile holder, which, in turn, is placed in the aluminium guide profile (see Figure 1).

On the outside at the top of the box, there is a slot - width 18.8 mm - for affixing the window anchors. The list of possible window anchors can be found on page 17.

The screens provide:
– Excellent sun protection and light obscuration.
– An outward view in daylight when in a lowered position (does not apply to obscuration fabric!).

For information on the available colours for the box, guide rail and bottom lath or available fabrics, please see the colour chart in the sun protection price list and the folders with our fabric range.

2. DIMENSIONS

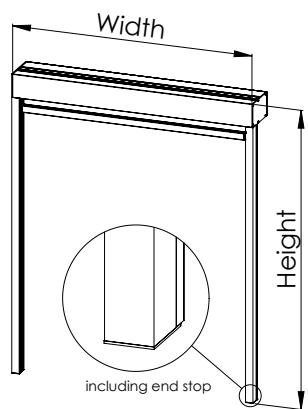

Fig. 2a

Figure 2a:
Finished sizes

The sizes to be specified are the width W and height H.

The finished width W is equal to the width measured between the outer edges of the guide rails. For the SC900 this corresponds to the width of the box. The box of the SC910 is 3 mm narrower.

This is not always the width of the window, but depends on the window finish on the inside (see Figure 2b). TThe finished height H is equal to the height including the box height and the end stop.

Both of these dimensions are expressed in mm (see Figure 2a).

Fig. 2b

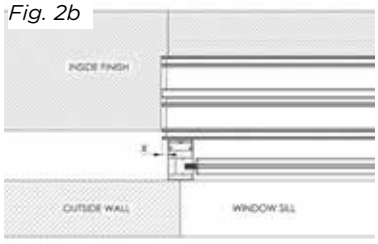

Figure 2b:
Inside finish

The maximum width is 5 m and height 3,5 m. The maximum area is 16 m². The minimum and maximum values for the width and height, depending on the chosen motor type, can be found on page 8, in table 2.

For more details concerning the finish options, please see page 16 and 20.

3. BOX FOR SURFACE-MOUNTED SCREEN

3.1 Box for surface-mounted screen SC900

Fig. 3a

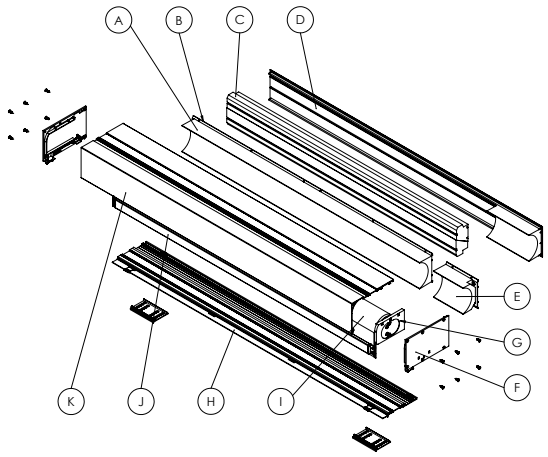

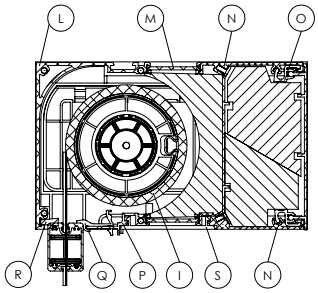

A	Acoustic insulation	J	Bottom lath
B	Support plate	K	Cover profile =(L+M+N)
C	Thermal insulation	L	Front plate
D	Cover	M	Guide
E	Viewing panel	N	Bottom profile 65
F	Side console	O	Clip for box cover
G	Sliding module	P	Bottom profile A
H	Bottom plate (=N+M+P)	Q	Touch for bottom lath
I	Fabric roll with fabric	R	Draught excluder brush

Figure 3a:
General structure and cross-section of the surface-mounted screen SC900.

The outer frame of the box for the surface-mounted screen is made up of three parts: the bottom plate (H), the cover profile (K) and the cover (D). In addition to the thermal (C) and acoustic (A) insulation, both of which are separated by the support plate (B), the box also contains a removable roll (I) with fabric. The sides are closed using side consoles (F). (See Figure 3a.)
The outer frame is made from extruded aluminium, with the exception of the top and bottom guides, which consist of glass fibre-filled polyamide. The colour of the bottom plate and the cover may vary from the colour of the cover profile, the colour on the outside. Hence, you need to specify two colours for the box; for an additional charge it can be painted in Bicolor (option 2632). The box is mounted on the window profile using the mounting supports (S).

Fig. 4

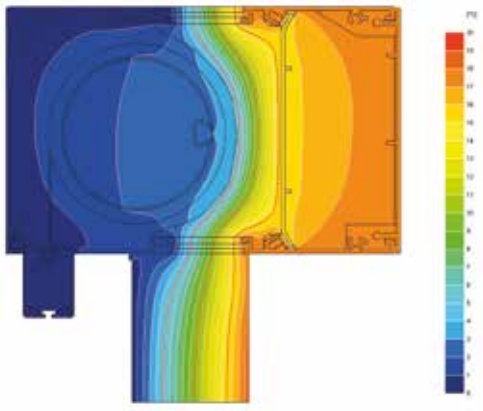

Figure 4:
Cross-section of the box with thermal image SC900

Internally the support plate ensures the unit is stable. It is made from extruded aluminium. For thermal insulation, Neopor (λ = 0,031 W/mK) is used, and for the acoustic polyurethane foam (λ = 0.035 W/mK).

The U-value of the surface-mounted screen is 1.3 W/m²K. Figure 4 shows a cross-section of the box with the thermal image for the SC900.

There is only one type of box available for the surface-mounted screen. The cross-section dimensions of the box, including the end cover, are as follows: W 203.5 mm x H 125.5 mm.

TO ENSURE AN AIRTIGHT SEAL BETWEEN THE WINDOW FRAME AND THE SCREEN BOX, A SUITABLE SEALING STRIP MUST BE FITTED.

Make sure the cover can always be opened, to ensure that the mechanical parts inside are accessible at all times. If this rule is not respected, Harol cannot be held responsible for the cost of demolition work or any paint work or wallpapering!

3.2 Box for surface-mounted screen SC910

Fig. 3b

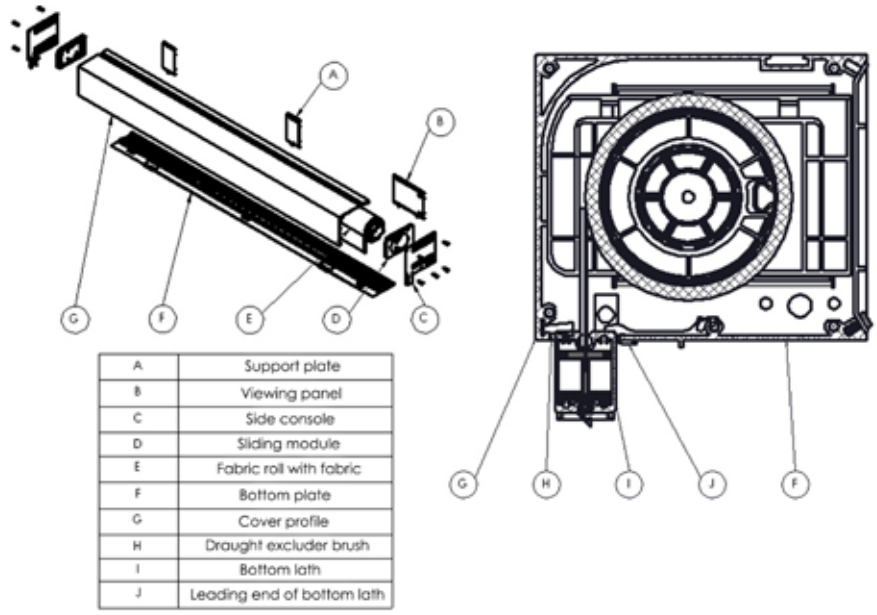

A	Support plate
B	Viewing panel
C	Side console
D	Sliding module
E	Fabric roll with fabric
F	Bottom plate
G	Cover profile
H	Draught excluder brush
I	Bottom lath
J	Leading end of bottom lath

Figure 3b:
General structure and cross-section of the surface-mounted screen SC910.

The outer frame of the box for the surface-mounted screen is made up of three parts: the bottom plate (F), the cover profile (G) and the support plates/viewing panel(A/B). The box contains a removable fabric roll with fabric (E). The sides are closed using side consoles (C). (See Figure 3b.)
The outer frame is constructed of extruded aluminium. The colour of the bottom plate and the cover profile always match.

The back of the screen box can be fully closed with a continuous support plate using option A2654.

There is only one type of box available for the surface-mounted screen. The cross-section dimensions of the box are: W 145 mm x H 125 mm.

In order to obtain the necessary insulation value, the screen box must be finished by the installer along the inside.

Make sure the cover can always be opened, to ensure that the mechanical parts inside are accessible at all times. If this rule is not respected, Harol cannot be held responsible for the cost of demolition work or any paint work or wallpapering!

4. THE FABRIC ROLL

The Ø 78 and 85 fabric rolls are made from galvanized steel. The extruded aluminium Ø 55 roll is used only for surface-mounted screens with a width of between 615 and 805 mm. The fabric rolls have a groove for attaching the fabric with a 4 mm canvas rod.

A conical gudgeon is placed on either side of the fabric roll. On the drive side, this is an open gudgeon for inserting the motor.

The minimum and maximum dimensions in relation to the roll diameter and motor type can be found on page 8, in table 2.

	ROLL Ø 55	ROLL Ø 78	ROLL Ø 85
Material:	Aluminium	Galvanized steel	Galvanized steel
Motor options	3	7	7
Canvas rod	Ø 4 mm	Ø 4 mm	Ø 4 mm
Maximum overall width	805 mm	4500 mm	5000 mm

Table 1:
List of fabric rolls

5. CONSOLES

The consoles consist of two separate parts:
– A fixed side console (see Figure 5).
– A sliding module (see Figure 5).

Side consoles SC900 (200.5 x 125.5 mm)
The side consoles are made from glass fibre reinforced nylon. The console is equipped with a small, moulded pivot, which fits into the lateral guides. On the inside it has two lugs where the sliding module is to be pushed in. In front of the side console on the driver side, there is space for drilling a hole for the cable bushing for the motor.

Side consoles SC910 (145 x 125 mm)
The side consoles are made from stainless steel. The console has a pivot, which fits into the lateral guides. On the inside there are two lugs for pushing in the sliding module. For the side console on the driver side there is space for the cable bushing of the motor.

Sliding modules SC900 and SC910 (133.3 x 79.0 mm)
The sliding modules are made of polyamide and have a number of holes for fastening the motor or the bearing plate. The corresponding holes must be used for each roll diameter.

Fig. 5

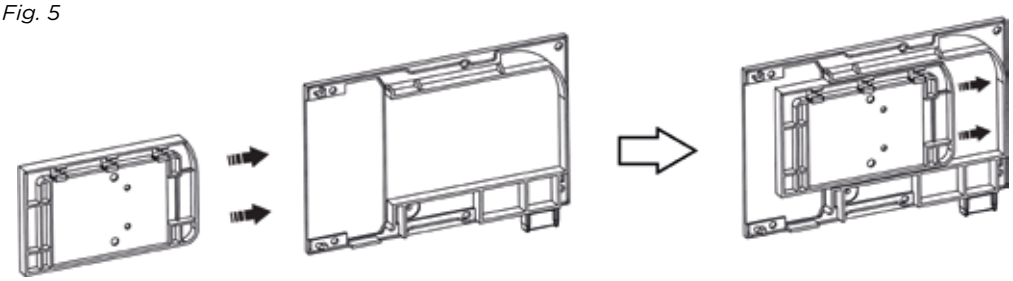

Figure 5:
Right side console and sliding module, separate and assembled

6. OPERATION

Attention:
The SC900 and SC910 surface-mounted screens are always viewed from INSIDE! (See Figure 6.)

Fig. 6

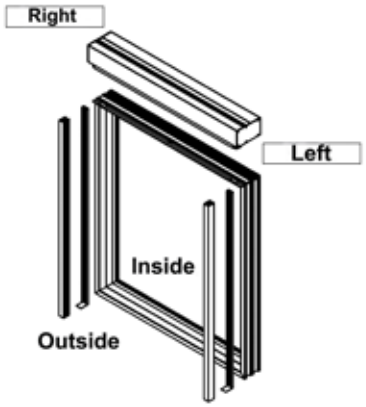

Figure 6:
Point to consider

The surface-mounted screen is always operated **electrically**. The operating side can be either on the left or the right. For each side there is only one cardan joint or operating exit possible in the actual side console. Other options for leading the motor cable to the outside are:

- Through the clip profile along the lateral guide, downwards.
- Through a hole to be drilled in the torque bar of the cover profile, upwards.
(See drawing on page 20)

Possible motor controls:

ROLL SIZE	OPTION	MOTORTYP	WIDTH*		HEIGHT*		CABLE LENGTHS**		
			MIN.	MAX.	MIN.	MAX.	3M	5M	10M
	Standard	Maestria+ 50 IO - 32 rpm	805				-	S	X
	A1380	Maestria+ 50 IO - 17 rpm	755				-	S	X
	A1077	Altus 50 RTS - 17 rpm	755				-	S	X
	A2698	Maestria 50 WT - 17 rpm	705	5000	400	3500	S	X	X
	A2696	Altus 50 RH WT - 25/17	825				S	X	X
	A1546	LT-50 - 17 rpm	655				S	X	X
	A1287	LT-50 - 32 rpm	665				S	X	X
	A2706	Selve SEZ2	675				S	X	X
AXLE Ø55	Standard	Sunea Screen IO-40 - 16 rpm	655				S	-	-
	A1069	Altus 40 RTS - 16 rpm	650	805	400	3500	S	-	-
	A939	LS-40 - 16 rpm	615				S	-	-

* See roll-up tables for the options per fabric type S: Standard X:Option

*** In order to facilitate easy removal of the fabric roll for the SC900 and the SC910, a cable loop is fitted. This shortens the useful cable length of the motor by 50 cm

Table 2:
Minimum and maximum dimensions including the possible cable lengths

- The motors can run for approx. 4 minutes, then they go into thermal safety mode (see the motor manual).
- The control buttons of the motors remain accessible: however, some things need to be removed for this (see the installation instructions).
- The standard configuration (motors : IO-40 16rpm of IO-50 32rpm) is equipped with a IO wall transmitter. For group operation and/or automation please see the Harol home automation catalogue.

7. BOTTOM LATH

Fig. 7

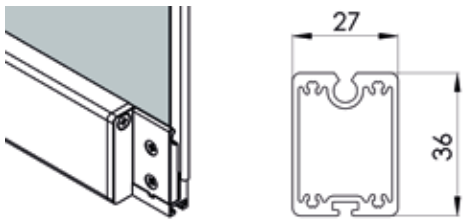

Figure 7:
Bottom lath with sliding block

The bottom lath consists of a two-part sliding block on the left and right and an extruded aluminium profile, which is powder-coated or silver anodised.

The profile includes:
- A groove for screwless fastening of the fabric using a canvas rod of Ø 3 mm.
- A chamber for a strengthening iron.
- A slot at the bottom to insert a damping rubber (there is also the option to use a brush strip).

The two-piece sliding block ensures the fabric is correctly tightened.

8. GUIDE RAILS

Fig. 8

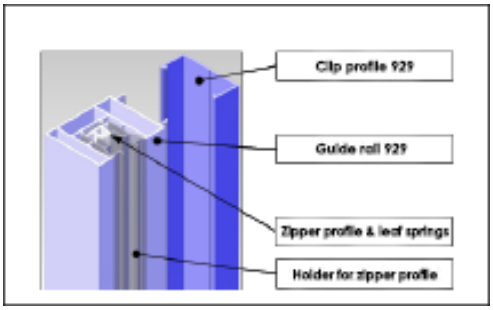

Figure 8:
Structure of a guide rail

The complete guide rails are composed of a clip profile and a guide rail profile with inside a holder with a zipper profile (see Figure 8).

The clip and guide rail profile are extruded aluminium profiles, both of which have a powder-coated layer or are silver anodised.

The holder for the zipper profile is available in grey or black colour.

The holder and the zipper profile are both made of plastic. Pressing the two lugs together makes it easy to click the holder with the zipper profile out from the guide profile.

There is one type of guide rail, the lateral guide "929".

Fig. 9

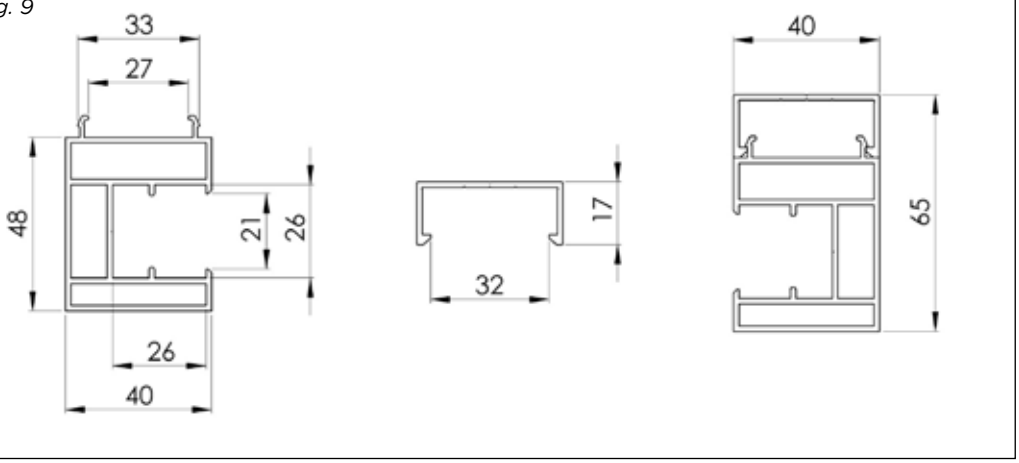

Figure 9:
Cross-sections with measurements of the guide rails

Fig. 10

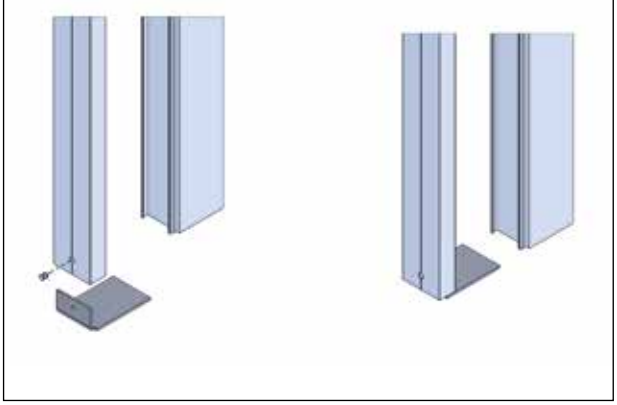

For a correct attachment, the clip profiles must first be fixed accurately to the window frame (see the installation instructions!).

Next, a stainless steel end stop with a thickness of 2 mm is attached to the bottom side of this clip profile.

Finally, the guide rail profile can then be clipped on to the clip profile.

Figure 10:
Assembly end stop

A number of screws are supplied with each guide rail for fastening the clip profile onto the window frame (see Table 3).

Table 3:
Number of screws per guide rail

TYPE OF SCREW	NUMBER/GUIDE RAIL
DIN 7981 – 4.8 x 25 mm – RVS-A2	(H/500) + 1 (round up)

9. POSSIBLE COMBINATIONS FOR MULTIPLE SURFACE-MOUNTED SCREENS

There are no further options to work with multiple fabric sections, other than the standard single surface-mounted screen.

10. FABRICS

There is a choice of different fabric qualities for the SC900 and SC910, each with its own specific characteristics.

	SOLTIS 86	SOLTIS 92	BLACK OUT B92	SERGE 600	SERGE 1%	BLOCKOUT LUNAR	STAM	CRISTAL CLEAR
Basic material	Polyester	Polyester	Polyester	Fibre glass	Fibre glass	Fibre glass	Polyester	Polyester
Weight (g/m²)	380	420	650	535	620	660	630	610
Thickness (mm)	0,43	0,45	0,60	0,55	0,80	0,78	0,55	0,50
Fire class EN 13501-1 NFP 92503 (F)								
	B-s2,d0	B-s2,d0	B-s2,d0	C-s3,d0	C-s3,d0	-	B-s2,d0	-
	M1	M1	M2	M1	M1	-	M2	M2
Roll width (mm)	1770 / 2670	1770 / 2670	1770	1900 / 2700 / 3200	2700	2100	2600	1400
Opening factor	14%	3%	0%	5%	1%	0%	0%	0%
Window films				X	X		X	X
Stripe direction	Horizontal							
Treatment	Welded							

Table 4:
Technical data of the fabric

1. Soltis 86 and Soltis 92 fabric:
- Transparent and refractive:
  - Manufactured from polyester fibres:
  - drawn under great strain.
  - secured with a high performance coating.
- The fabric is varnished on both sides:
  - excelent protection against UV
  - is dirt-repellent
- In case of two-colored fabrics, the Alu side is always on the outside or side sight
- **Attention! Screens with a height greater than 1570/2470 mm are fitted with a horizontal weld seam!**

2. Black-out B92 fabric:
- Opaque, light-blocking fabric:
  - made from polyester fibres:
  - stretched under tension
  - fixed with a Plastisol layer
  - secured with a high performance coating.
- **Attention! Screens with a height greater than 1430 mm are fitted with a horizontal weld seam!**
  - Fabric suitable for indoor and outdoor use.
  - Black out film is positioned at the side of the window with each mounting type.
  - For outside mounting, the bottom lath and fabric may rise slightly due to heavy wind loads, therefore 100% black-out cannot be guaranteed at all times.
  - For the Blackout fabrics the zippers are welded to the fabric on the window side.

3. Serge 600 and 1% fabric:
- Transparent and refractive
- Manufactured from glass fibre thread:
  - coated with a synthetic material based on polyvinyl chloride.
  - coloured in mass
  - fixed with a Plastisol layer
- The front side or right side of the fabric appears on the outside or view side
- **Attention! For Serge 600 fabrics, screens with a height greater than 1630/2430/2930 mm are fitted with a horizontal weld seam; for Serge 1% fabrics the same applies to heights greater than 2430 mm!**

4. Blockout Lunar fabric:
- The glass fibres are coated with a synthetic material based on polyvinyl chloride, spun-dyed and fixed with a Plastisol layer.
- Fabric suitable for both indoor and outdoor use.
- Black-out film is applied to the window side as standard with every fitting type.
- For exterior mounting, the bottom slat and fabric may rise slightly due to heavy wind loads, therefore 100% black-out cannot be guaranteed at all times.
- For the Blockout Lunar fabrics the zippers are welded to the fabric on the window side

5. STAM 6002 fabric:
- Opaque, translucent fabricl:
  - made from mesh polyester fibres:
  - stretched under tension
    (in accordance with Precontraint method)
  - supplied with a PVC coating on both sides
  - **Attention! Screens with a height greater than 2400 mm are fitted with a horizontal weld seam!.**

6. Cristal Clear fabric:
- Completely transparent and non-refractive fabric:
  - is a transparent PVC film:
  - **Attention! Screens with a height greater than 1400 mm are fitted with a horizontal weld seam!**

Zippers are placed on the sides of each fabric, and with correctly fitted guide rails, the zippers ensure that the fabric is taut in any height position of the bottom lath, due to the tension between the zipper and the guide rails.

For all fabrics the zippers are welded to the fabric on the window side.

In addition to the options for applying letters or logos on the fabric, there is also the option to invert the fabric colour or fabric side in the screen (A490).

With Blackout and Lunar fabrics the coloured side is visible from inside, not the foil side. With the Serge 600 fabrics the front is then visible, or the right side of the fabric.

Note: only fabrics 3, 5, and 6 are used when making window combinations with the screens

Figure 11:
Visualisation option A490

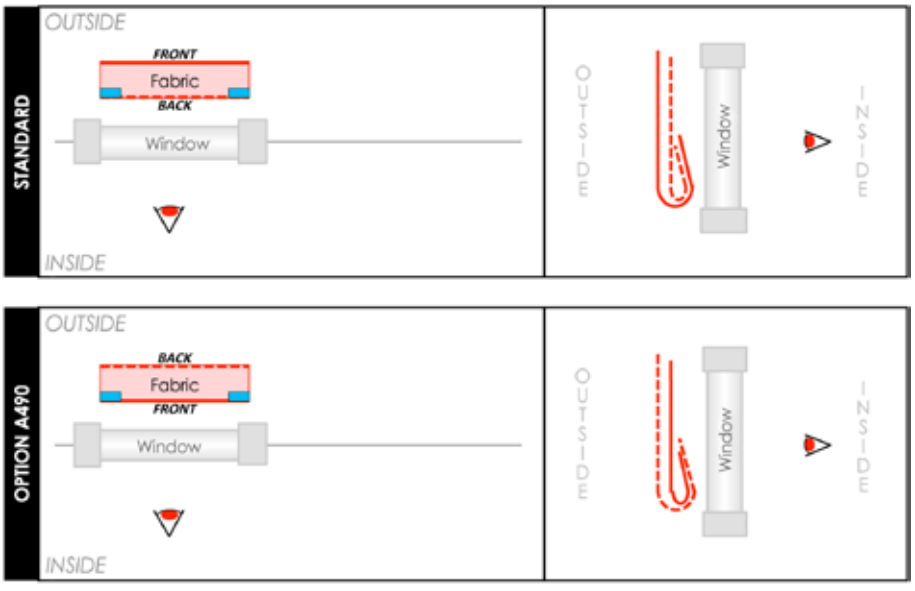

LEGEND

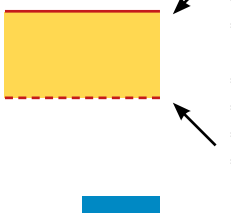

* Front for Serge 600 or Serge 1%
* Serge-side for Blockout Lunar
* Soltis-side for Black-Out
* Alu-side for Soltis dual colour fabrics

* Back for Serge 600 or Serge 1%
* Film-side for Blockout Lunar
* Film-side for Black-out
* Colour-side for Soltis dual colour fabrics

Reinforcement band / Zipper

11. OBSCURATION

The SC900/SC910 can be used to darken a room, i.e. shield the outdoor light in order to give presentations or show slides, but it is not such that photos can be developed, in other words, it is not 100% blackout.

To achieve a proper blackout, the following points need to be taken into account:

- It is only possible by using a Black-out B92 or Block-out Lunar fabric.
- The spaces between the guide rails, the wall and the window frame must be carefully sealed (with, for example, silicones, strips, or the like).
- The rubber or brush of the bottom lath should touch the window sill correctly. The bottom lath must keep the fabric taut, which is not possible if it is completely resting on the window sill.
- Wind action can cause the bottom lath to waft up, and as a result a gap may occur.
- Option A2426, placing an extra angled profile on the window sill for the bottom lath, further reduces the chance of a gap appearing.

12. WEIGHT

The weight of the box based on a fabric roll of Ø 78, an LT-50 motor and Serge 600 fabric, can be found in Table 4a below; the weight of two standard lateral guides 929 can be found in Table 4b.

The total weight of a surface-mounted screen with a width of 1.5 metres and a height of 1 metre, is approx. 26.2 kg.

BOX	
LENGTH	WEIGHT
1.0 m	Approx. 16 kg
1.5 m	Approx. 23 kg
2.0 m	Approx. 30 kg
2.5 m	Approx. 37 kg
3.0 m	Approx. 44 kg
3.5 m	Approx. 51 kg
4.0 m	Approx. 58 kg
4.5 m	Approx. 65 kg
5.0 m	Approx. 72 kg

Table 4a:
Weight of the box

2 GUIDE RAILS	
LENGTH	WEIGHT
0.5 m	Approx. 1.6 kg
1.0 m	Approx. 3.2 kg
1.5 m	Approx. 4.8 kg
2.0 m	Approx. 6.4 kg
2.5 m	Approx. 8.0 kg
3.0 m	Approx. 9.6 kg
3.5 m	Approx. 11.2 kg
4.0 m	Approx. 12.8 kg
4.5 m	Approx. 14.4 kg

Table 4b:
Weight of the guide rails

13. FINISH

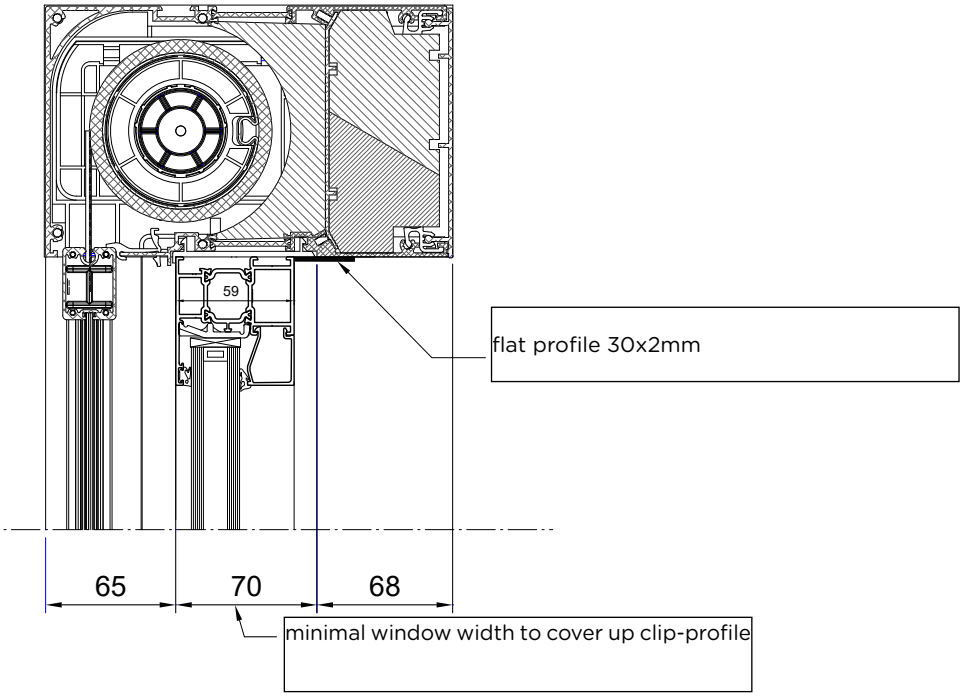

If the screen is fitted on window profiles < 70 mm, a finishing profile is required (in the same colour as the base plate) to hide the ridge of the fastening system. This profile must be glued to the bottom of the box using the double-sided tape already applied to the profile.

When ordering, select the A2699 option.

14. GENERAL REMARKS

- The guarantee conditions can be found on the guarantee card. This card has a Harol® identification label and lists the order number, date of manufacture and the number of products. For the guarantee to take effect, the fitter must complete the guarantee card, stamp it and return it to HAROL within 10 days after installation of a Harol® sun protection product.
- All electrical connections must be made according to the statutory provisions of the relevant country. Electrical connections and proper operation are the responsibility of the installer.
- Harol does not accept any responsibility in the event a screen is wrenched off by wind or storm. The installer must take into consideration all precautionary measures necessary to order a product suitable for the installation site.
- Under no circumstances should the surface-mounted screen be seen as a structural element that contributes towards the strength of the window, regardless of how the surface-mounted screen has been fitted.
- The surface-mounted screen must only be mounted on self-supporting structures that have a sufficient degree of strength to carry a surface-mounted screen.
- All information in this brochure is provided in good faith and is for informational purposes only. It reflects the present state of our knowledge and abilities and cannot be used against us. Harol is continuously working on the further development of all models, and reserves the right to make changes at any time without further prior notice, and without this resulting in any further obligations.

15. ROLL-UP TABLES

SC900/SC910 - SOLTIS 86/92

height	width										
	615-654	655-804	805	1000	2000	3000	4000	4100	4400	4500
400	55	55	78	78	78	78	78	85	85	85
1000	55	55	78	78	78	78	78	85	85	85
2000	55	55	78	78	78	78	78	85	85	85
2300	55	55	78	78	78	78	78	85	85	85
2400	55	55	78	78	78	78	78	85	85	
2600	55	55	78	78	78	78	78	85	85	
2700	55	55	78	78	78	78	78			
3000	55	55	78	78	78	78	78			
3500	55	55	78	78	78	78	78			

Fabric: Soltis 86 & 92
Operation: Motor-IO-50 (IO-40)
Axle: Ø55 - Ø78 - Ø85
Box: StandardBox

Minimal width:

As Ø55

Bediening	B min	B max
IO-40	Standaard	
	655 mm	804 mm
RTS 40	A1069	
	650 mm	754 mm
LS-40	A939	
	615 mm	664 mm

As Ø78 / Ø85

Bediening	B min	
	32 tpm	17 tpm
IO-50	**Standaard** 805 mm	**A1380** 755 mm
RTS 50		**A1077** 755 mm
WT-50		**A2698** 705 mm
LT-50	**A1287** 665 mm	**A1546** 655 mm

Legend

55	Axle Ø55 - IO not possible
55	Axle Ø55 - IO-40
78	Axle Ø78 - IO-50
85	Axle Ø85 - IO-50
	Not possible

SC900/SC910 - SERGE 600

height	width										
	615-654	655-804	805	1000	2000	3000	4000	4400	4500	4900	5000
400	55	55	78	78	78	78	78	78	85	85	85
1000	55	55	78	78	78	78	78	78	85	85	85
2000	55	55	78	78	78	78	78	78	85	85	85
2100	55	55	78	78	78	78	78	78	85	85	85
2200	55	55	78	78	78	78	78	78	85	85	
2400	55	55	78	78	78	78	78	78	85	85	
2500	55	55	78	78	78	78	78	78			
3000	55	55	78	78	78	78	78	78			
3500	55	55	78	78	78	78	78	78			

Fabric: Serge 600
Operation: Motor-IO-50 (IO-40)
Axle: Ø55 - Ø78 - Ø85
Box: StandardBox

Minimal width:

As Ø55

Bediening	B min	B max
IO-40	Standaard	
	655 mm	804 mm
RTS 40	A1069	
	650 mm	754 mm
LS-40	A939	
	615 mm	664 mm

As Ø78 / Ø85

Bediening	B min	
	32 tpm	17 tpm
IO-50	**Standaard** 805 mm	**A1380** 755 mm
RTS 50		**A1077** 755 mm
WT-50		**A2698** 705 mm
LT-50	**A1287** 665 mm	**A1546** 655 mm

Legend

55	Axle Ø55 - IO not possible
55	Axle Ø55 - IO-40
78	Axle Ø78 - IO-50
85	Axle Ø85 - IO-50
	Not possible

SC900/SC910 - SERGE 1%

height \ width	615-654	655-804	805	1000	2000	3000	3600	3700	3800	3900	4000	4100	4200	4300	4400
400	55	55	78	78	78	78	78	78	78	78	78	85	85	85	85
1000	55	55	78	78	78	78	78	78	78	78	78	85	85	85	85
1100	55	55	78	78	78	78	78	78	78	78	78	85	85	85	
1200	55	55	78	78	78	78	78	78	78	78	78	85	85	85	
1300	55	55	78	78	78	78	78	78	78	78	85	85	85	85	
1400	55	55	78	78	78	78	78	78	78	78	85	85	85	85	
1500	55	55	78	78	78	78	78	78	78	78	85	85	85		
1800	55	55	78	78	78	78	78	78	78	78	85	85	85		
1900	55	55	78	78	78	78	78	78	78	85	85	85	85		
2000	55	55	78	78	78	78	78	78	78	85	85	85			
2400	55	55	78	78	78	78	78	78	78	85	85	85			
2500	55	55	78	78	78	78	78	78	85	85	85	85			
2600	55	55	78	78	78	78	78	78	85	85	85	85			
2700	55	55	78	78	78	78	78	78							
3000	55	55	78	78	78	78	78	78							
3200	55	55	78	78	78	78	78	78							
3300	55	55	78	78	78	78	78								
3500	55	55	78	78	78	78	78								

Fabric: Serge 1%
Operation: Motor-IO-50 (IO-40)
Axle: Ø55 - Ø78 - Ø85
Box: StandardBox

Minimal width:

As Ø55

Bediening	B min	B max
IO-40	Standaard	
	655 mm	804 mm
RTS 40	A1069	
	650 mm	754 mm
LS-40	A939	
	615 mm	664 mm

As Ø78 / Ø85

Bediening	B min	
	32 tpm	17 tpm
IO-50	**Standaard** 805 mm	**A1380** 755 mm
RTS 50		**A1077** 755 mm
WT-50		**A2698** 705 mm
LT-50	**A1287** 665 mm	**A1546** 655 mm

Legend

55	Axle Ø55 - IO not possible
55	Axle Ø55 - IO-40
78	Axle Ø78 - IO-50
85	Axle Ø85 - IO-50
	Not possible

SC900/SC910 - BLACK-OUT

height \ width	615-654	655-804	805	1000	2000	3000	4000	4100	4400	4500
400	55	55	78	78	78	78	78	85	85	85
1000	55	55	78	78	78	78	78	85	85	85
1900	55	55	78	78	78	78	78	85	85	85
2000	55	55	78	78	78	78	78	85	85	
2100	55	55	78	78	78	78	78	85	85	
2200	55	55	78	78	78	78	78			
2500	55	55	78	78	78	78	78			
3000	55	55	78	78	78	78	78			

Fabric: Black-Out
Operation: Motor-IO-50 (IO-40)
Axle: Ø55 - Ø78 - Ø85
Box: StandardBox

Minimal width:

As Ø55

Bediening	B min	B max
IO-40	Standaard	
	655 mm	804 mm
RTS 40	A1069	
	650 mm	754 mm
LS-40	A939	
	615 mm	664 mm

As Ø78 / Ø85

Bediening	B min	
	32 tpm	17 tpm
IO-50	**Standaard** 805 mm	**A1380** 755 mm
RTS 50		**A1077** 755 mm
WT-50		**A2698** 705 mm
LT-50	**A1287** 665 mm	**A1546** 655 mm

Legend

55	Axle Ø55 - IO not possible
55	Axle Ø55 - IO-40
78	Axle Ø78 - IO-50
85	Axle Ø85 - IO-50
	Not possible

Window Fabric: roll-up tables SC900/SC910

SC900/SC910 - RAAMDOEK									
		width							
		805	1000	2000	3000	4000	4400	4500	4900	5000
height	400	78	78	78	78	78	78	85	85	85
	1000	78	78	78	78	78	78	85	85	85
	2000	78	78	78	78	78	78	85	85	85
	2100	78	78	78	78	78	78	85	85	85
	2200	78	78	78	78	78	78	85	85	
	2400	78	78	78	78	78	78	85	85	
	2500	78	78	78	78	78	78			
	3000	78	78	78	78	78	78			

Fabric: STAM + Cristal Clear
Serge 600 + Cristal Clear,
Serge 1% + Cristal Clear
STAM or Serge 600 or Serge 1%

Operation: Motor-IO-50

Axle: Ø78 - Ø85

Box: Standard

Minimum width:

As Ø78 / Ø85

Bediening	B min	
	32 tpm	17 tpm
IO-50	**Standaard** 805 mm	**A1380** 755 mm
RTS 50		**A1077** 755 mm
WT-50		**A2698** 705 mm
LT-50	**A1287** 665 mm	**A1546** 655 mm

Legend

78	Axle Ø78 - IO-50
85	Axle Ø85 - IO-50
	Not possible

16. CROSS-SECTION DIMENSIONING OF THE BOX

16.1. SC900

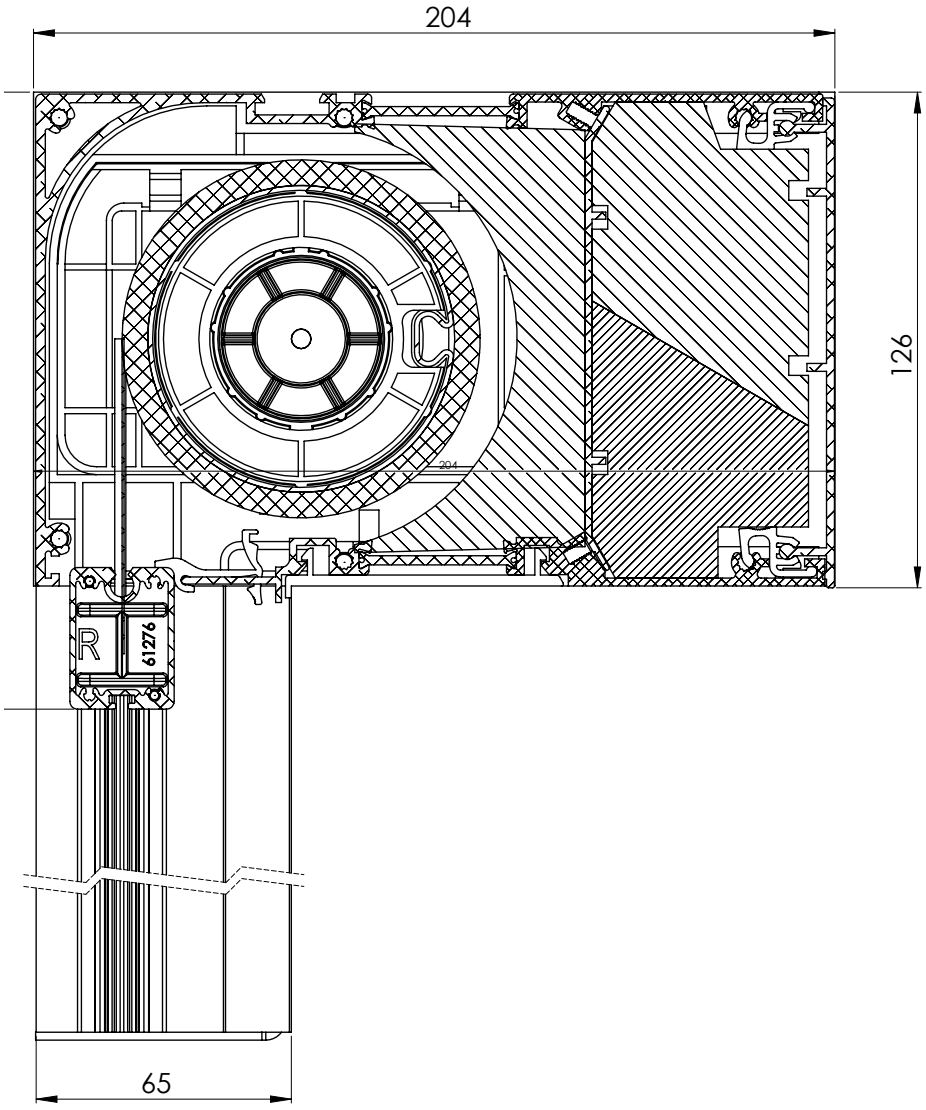

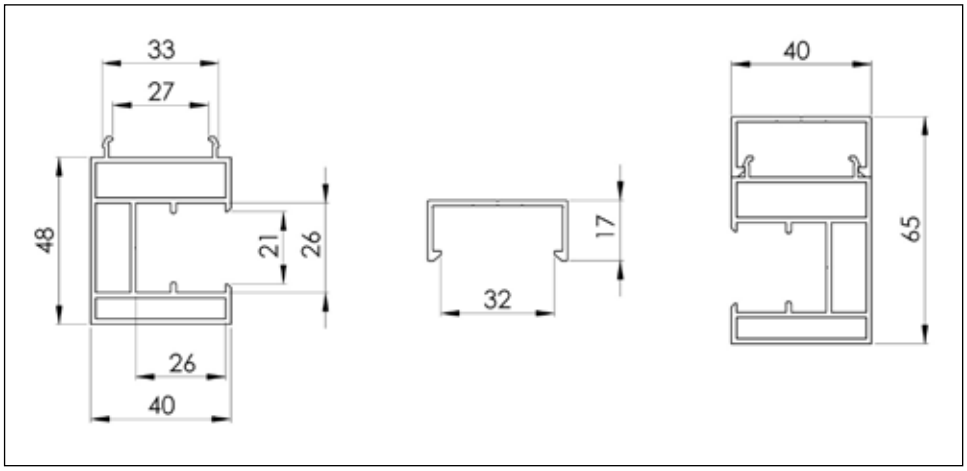

16.2. SC910

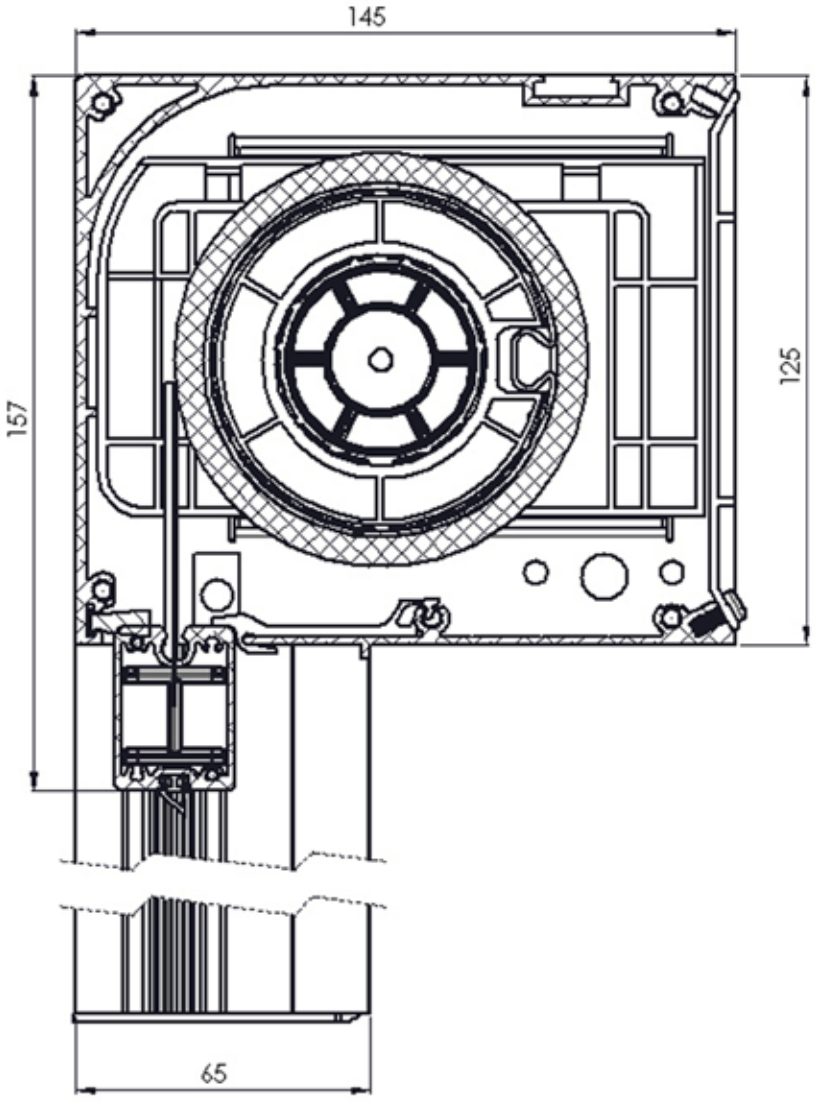

17. WINDOW ANCHORS

The window anchors below can be used to fasten the SC900/SC910 box to the wall recess (minimum length **160 mm**!):

- ALIPLAST ACVL 130 (160 x 38 x 2)
- REYNAERS window cl. Fulchs 439.119 (200 x 25 x 2) - available from Harol (optional)

18. ORDER FORM SC900 / SC910

Click on the button below:

Order form SC900 / SC910

19. FINISH OPTIONS

